HÄFELE

www.hafele.co.uk

NEW AND EXCLUSIVE:
WIREWORK FROM HÄFELE

WIREWORK FROM HÄFELE

INTRODUCING THE NEW RANGE OF WIREWORK, MANUFACTURED EXCLUSIVELY FOR HÄFELE.

Featuring a sleek flat chrome bar, instead of the traditional rounded bar, our wirework perfectly combines day-to-day functionality with elegant Italian styling.

Our range:

> Swing Out Larder Unit
> Corner Unit
> Pull Out Storage Basket
> 150mm 2 Tier Storage Basket

Features:

> Sleek flat chrome bar design
> Solid bases for increased stability
> Ideal for retrofitting
> Smooth movement
> Easy access via a pull or swing out function means no more reaching into shelves

SLEEK ITALIAN STYLE

HÄFELE CORNER UNIT

The shelves of our corner unit operate independently of each one another for maximum flexibility. They can be fitted on the cabinet shelf or with a frame, making the unit ideal for retro-fitting. The sleek flat bar design and solid base make sure it's as stable as it is stylish.

Photo shows, right hand version, installed with pull out frame

Häfele corner pull out shelving unit, white base with polished chrome flat bar rail

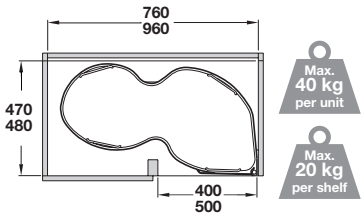

Right hand version shown

- For minimum cabinet widths 800 or 1000 mm
- Trays operate independently
- Ideal for retrofitting
- Every set comes complete with fixing materials and fitting instructions
- Installed height per shelf: 150 mm
- Built in depth: 470 or 480 mm
- 1 guide fixes to cabinet shelf, 1 guide to base of cabinet, pivoting mechanisms fix to cabinet sides
- Please note: Shelf must be installed in cabinet (not included) or a pull out frame is required (see below)
- Set includes:
  2x White solid base shelves with flat bar rail
  2x White plastic guides
  2x Pivoting mechanisms
- Order qty: 1 set

	Base Mounting	Handed L R	800	1000	Fixings included ✔
For cabinet width		800 mm		1000 mm	
For door width		400 mm		500 mm	
Left hand		549.42.341		549.42.351	
Right hand		549.42.340		549.42.350	

Corner pull out frame

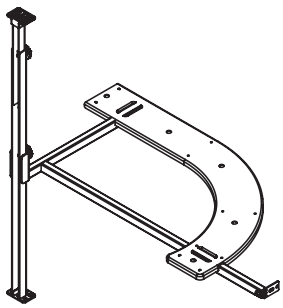

- For use with pull out corner units
- Allows fitting of the shelving unit without cabinet shelves being installed in cabinet
- Only required for top shelf application
- Steel frame
- Order qty: 1 set

	Handed L R	Fixings included ✔
	Left hand	Right hand
Cat. No.	549.42.991	549.42.990

Wirework from Häfele Aug 2016 Dimensional data not binding. We reserve the right to alter specifications without notice. Prices correct at time of going to print.

HÄFELE PULL OUT STORAGE BASKETS

Häfele pull out basket set with solid white base

- To suit 300, 500 or 600 mm cabinet widths with 15/16 or 18/19 mm board thickness
- Built-in depth: 450 mm
- Basket depth: 395 mm
- Includes soft close
- Stated basket width includes basket, runners and spacer
- Set includes:
  1x Storage basket, chrome-plated steel and white solid base basket
  1x Pair concealed full extension runners, galvanized steel
- Order qty: 1 set

For hinged door cabinets

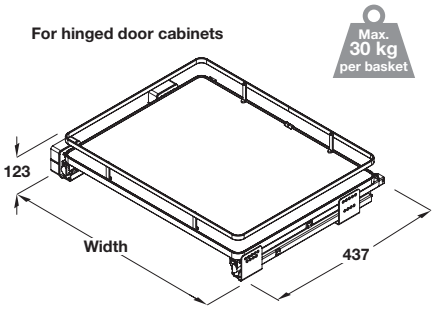

Side Mounting | 300 | 500 | 600 | Soft Closing | Fixings included

For cabinet width	Basket width	Cat. No.
300 mm	264 mm	540.03.701
500 mm	464 mm	540.03.705
600 mm	564 mm	540.03.707

Häfele 150 mm pull out storage unit, full extension

- For minimum 150 mm cabinet width
- Built-in depth: 450 mm
- Fitted to the left hand cabinet side, as the runner is concealed
- Includes soft close
- Set includes:
  1x Two tier storage basket, chrome-plated steel with white solid base
  2x Full extension ball bearing runners, galvanized steel
  2x Door brackets, galvanized steel
- Order qty: 1 set

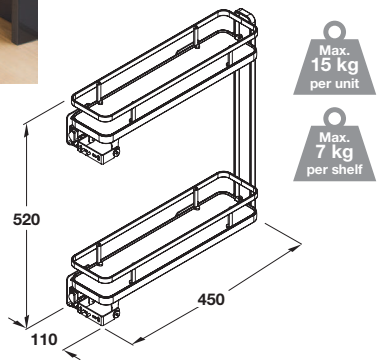

Shelf dimensions
(H x W x D): 75 x 105 x 423 mm

Side Mounting | Left handed | 150 | Fixings included

For 150 mm cabinet width	Cat. No.
Left handed	549.27.230

Wirework from Häfele Aug 2016 Dimensional data not binding. We reserve the right to alter specifications without notice. Prices correct at time of going to print.

HÄFELE SWING OUT LARDER UNIT

The Häfele Swing Out Larder Unit is side and base mounted, for a hinge door fixing. Open on three sides, it gives improved access to the stored items in comparison to a traditional pull-out larder system.

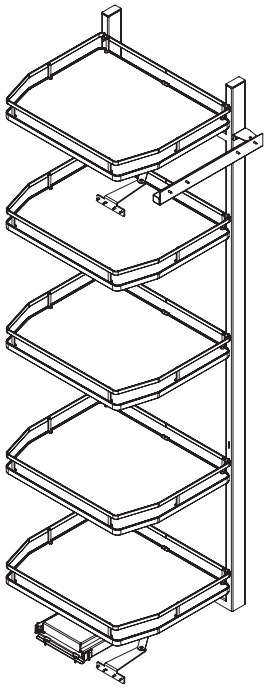

Häfele swing out larder unit complete set, full extension

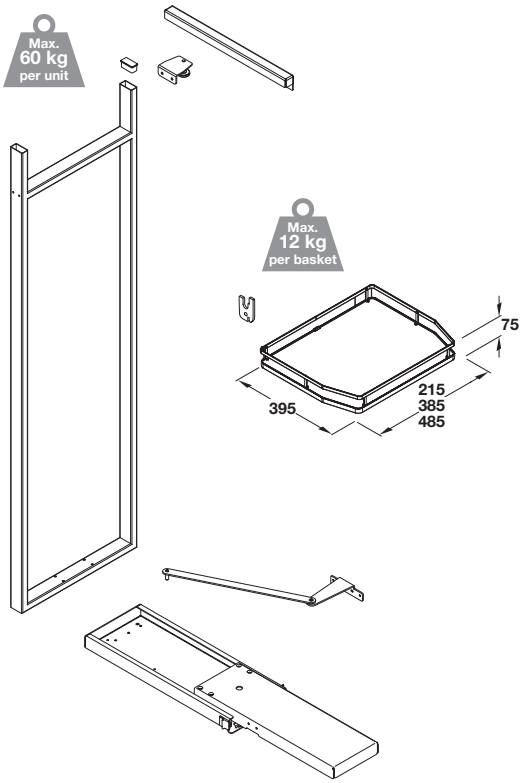

- For cabinet widths 300, 500 or 600 mm
- For installed heights:
  Minimum 1750 mm: 5x baskets included, chrome-plated steel wire with white solid base
- Built-in depth min. 465 mm
- Built-in width min. 240/440/540 mm
- Recommended hinges 120º (not included). If soft closing required, hinges with damper must be used
- Set includes:
  1x Frame set; 1x frame
  1x Runner set; top runner, top roller and bottom runner
  1x Basket set: 5 baskets and 10 hooks
- Order qty: 1 set

	Base Mounting 300	Base Mounting 500	Base Mounting 600	Fixings included ✔
For cabinet width	300 mm	500 mm	600 mm	
Basket width	215 mm	385 mm	485 mm	
Cat. No.	549.86.724	549.86.754	549.86.774	

Wirework from Häfele Aug 2016 Dimensional data not binding. We reserve the right to alter specifications without notice. Prices correct at time of going to print.

HÄFELE

Häfele UK Ltd | Swift Valley Industrial Estate | Rugby | Warwickshire | CV21 1RD | Registered in England No. 1486136
Phone: 0800 171 2909 | **Fax:** 01788 544440 | **Email:** info@hafele.co.uk

www.hafele.co.uk